Scandrive SE
External oscillators



Traditionally oscillators are driven by the main press drives through worm gears and cranks. This places great limitations on the layout of modern presses and takes up valuable space. It also requires a large oil bath and that the oscillators be located on the drive side.

SKF's new SE oscillators overcome all of these problems by offering compact units - the oscillators are no larger than the vibrators - which are:

- Self-contained units independent of the drive system
- Oscillators that can be mounted on control side or drive side
- Sealed for life mechanisms

The design is based on SKF's proven eccentric gears which provide very high reduction ratios, plus a follower in a deep, precision milled, sinusoidal track.

A range of reduction ratios and stroke lengths is available to suit all applications on web widths up to 1 600 mm. High operating speeds are possible but reduction ratios should be selected high enough to ensure that inertia forces and vibration frequencies are within acceptable limits for the press.

The whole mechanism is contained in a compact housing. When fitted on the control side the housing is greased and sealed for life. Units for the drive side can be sealed for life or connected to the central lubrication system.

Fitting is simple – a tapered, threaded hole in the vibrator roller shaft plus three bolt holes in the press frame. The oscillator housing is factory machined to mate with the vibrator bush spigot, thus ensuring accurate alignment.

External Oscillators SE

Installation examples/main dimensions

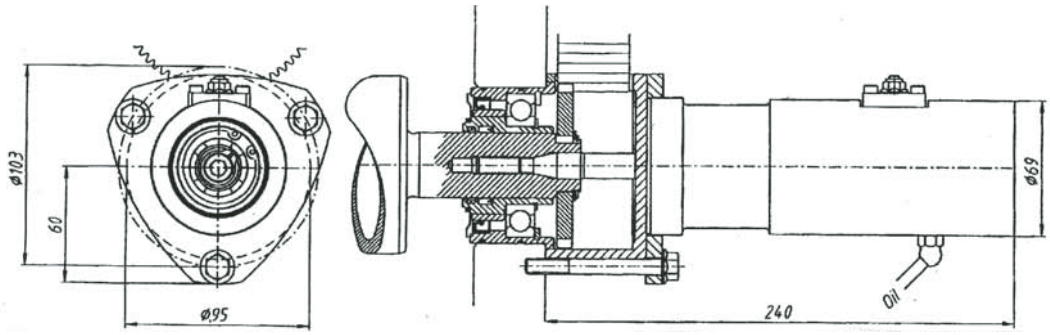

SE 80 on drive side, lubricated by circulating oil

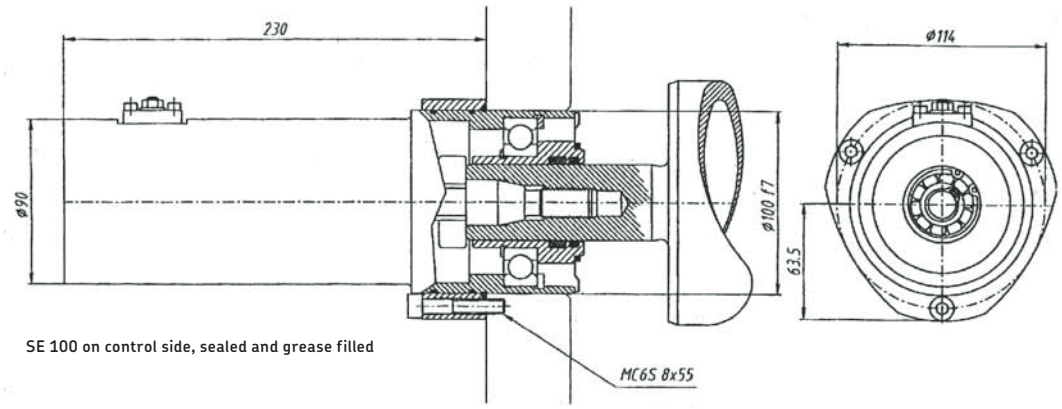

SE 100 on control side, sealed and grease filled

Technical data (preliminary)	Unit	SE 80	SE 100	SE 130
Outside diameter, D1	mm	70	90	130
Outside diameter, D2 (dependent on gearwheel)	mm	Approx. 95	Approx. 130	Approx. 140
Length (drive side with gearwheel)	mm	240	Approx. 270	Approx. 325
Length (control side)	mm	Approx. 200	230	275
Gear ratios	-	10,2:1, 15,8:1, or 32,5:1	7,8:1, 10,7:1, or 16,5:1	7,6:1, 11,0:1, or 17,0:1*
Vibrator roller speed range	rpm	0 to 3 000	0 to 3 000	0 to 2 500
Recommended oscillation frequency	Hz	1 to 3	1 to 3	1 to 3
Stroke	mm	11, 16, 25	11, 16, 25, 32	11, 17, 26*
Max axial force (inertia + friction)	N	300	800	2 000

*Typical values
Please consult your SKF contact to check and approve all applications.
Further models to extend the range are under development. Please send your specification.

SKF Actuators AB
SE- 415 50 Gothenburg
www.actuators.skf.com

Publication **6340EN - 0607A**

SKF is a registered trademark of the SKF Group.

© SKF Group 2006
The contents of this publication are the copyright of the publisher and may not be reproduced (even extracts) unless prior written permission is granted. Every care has been taken to ensure the accuracy of the information contained in this publication but no liability can be accepted for any loss or damage whether direct, indirect or consequential arising out of the use of the information contained herein.